No.	Plan	Article	Qty
1	P00105592 (1)	2905626	1
	P00106415 (2)	2908326	1
	P00105594 (3)	2905726	1
	P00105596 (4)	2905826	1
	P00105598 (5)	2905926	1
	P00105600 (6)	2906026	1
	P00105602 (7)	2906126	1
	P00106417 (8)	2908426	1
2	P00105425	2998689	1
|3**	P00121240	GP00362	1
4	E00121829	---	1
5	P00121828	GP00363	1
6	1001570	1001570	1

Size marking (2)

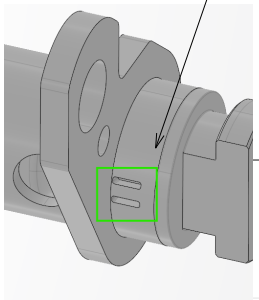

	TRIGO S		TRIGO T B06			Article	2905626	2908326	2905726	2905826	2905926	2906026	2906126	2908426	Article	V500									
	SPORT/GO		SPORT	SPORT/GO		Name	Bar for frame size 38	Bar for frame size 39 V500	Bar for frame size 40	Bar for frame size 42	Bar for frame size 44	Bar for frame size 46	Bar for frame size 48	Bar for frame size 50 V500	Name	BLUMIL SPORT					BLUMIL GO			
FOOTREST	70/80/90		70	80		90	Plan	P00105592	P00106415	P00105594	P00105596	P00105598	P00105600	P00105602	P00106417	Plan	B06 90	B06	B06 N	BA6	B08	BK7/BL7	B06		B06 90	
	Folding	Opening		L	R		TRIGO T/S								V500 (frame width)						L	R	L	R
	ok	ok	ok			ok	38	1							39	ok	ok	ok	ok	ok			ok	ok
									1															
	ok	ok	ok	2993501	2993502	ok	40			1					42	ok	ok	ok	ok	ok			ok	ok
	ok	ok	ok	2993501	2993502	ok	42				1				44	ok	ok	ok	ok	ok	1904646	1904647	ok	ok
	ok	ok	ok	ok	ok	ok	44					1			46	ok	ok	ok	ok	ok	1904646	1904647	ok	ok
	ok	ok	ok	2993475	2993476	ok	46						1		48	ok	ok	ok	ok	ok	1904210	1904475	ok	ok
	ok	ok	ok	ok	ok	ok	48							1	50	ok	ok	ok	ok	ok	1904210	1904475	ok	ok
	ok	ok	ok	2993480	2993479	ok	50																	

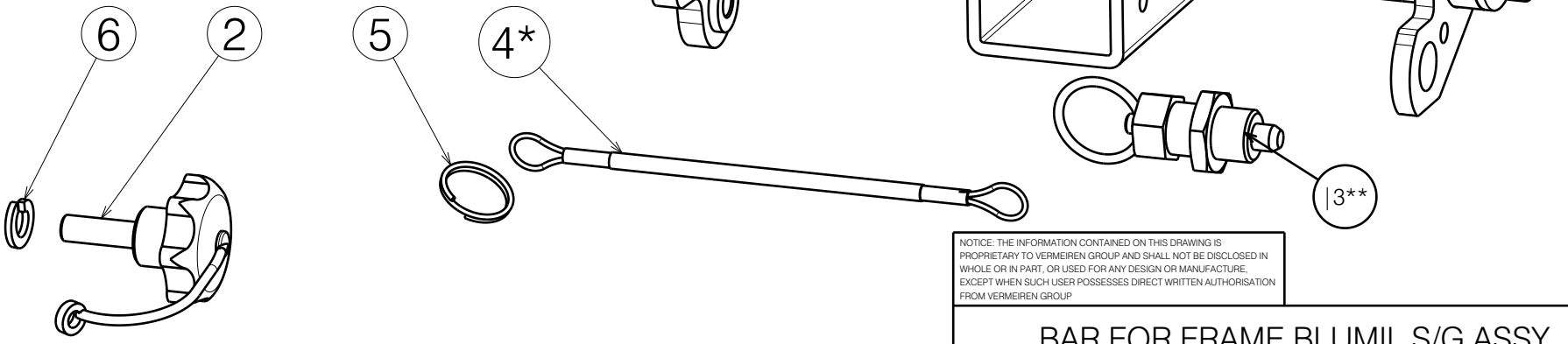

* made to measure

** use thread-locking adhesive after adjustment

NOTICE: THE INFORMATION CONTAINED ON THIS DRAWING IS PROPRIETARY TO VERMEIREN GROUP AND SHALL NOT BE DISCLOSED IN WHOLE OR IN PART, OR USED FOR ANY DESIGN OR MANUFACTURE, EXCEPT WHEN SUCH USER POSSESSES DIRECT WRITTEN AUTHORISATION FROM VERMEIREN GROUP

BAR FOR FRAME BLUMIL S/G ASSY

Scale: 1:2	Drafted	Verified	Confirmed
Date	30.03.2026	30.09.2026	30.09.2026
Initials	KK	PM	MK

Plan No.

E00121241/C.1

VERMEIREN