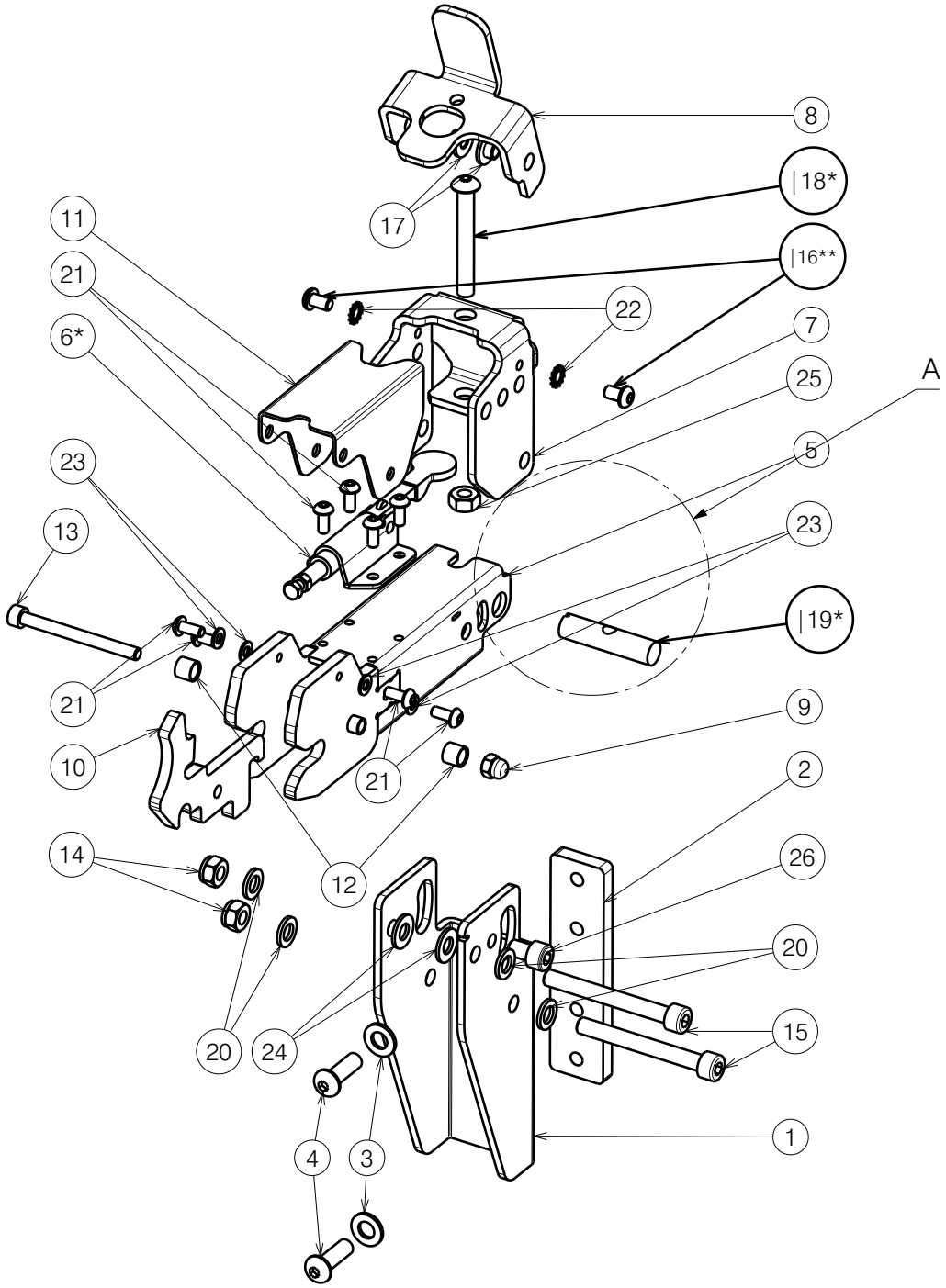

No.	Plan	Article	Qty
1	P00112620	2921654	1
2	P00112619	2921754	1
3	Washer_DIN126_9x17x1.6	1001554	2
4	1990501_M8x25	1990501	2
5	P00115652 DP	2921526	1
6*	P00116209	2980013	1
7	P00116611	2921254	1
8	P00115613	2921003	1
9	2994059	2994059	1
10	P00115660	2921403	1
11	P00116954	2921354	1
12	XP03050	GP23100	2
13	M6X65 DIN912/8.8 BLACK	2995119	1
14	1996213	1996213	2
15	Inner_Hex_M8x70	1005289	2
|16**	M6x10_black	2994127	2
17	XP01954	2993706	2
|18*	M8x60	2980181	1
|19*	P00116610	2927000	1
20	WASHER PA6 M8 DIN125	1001556	4
21	2994074 M5x12 black	2994074	8
22	TEETH WASHER M6 ZINK DIN6798	2992426	2
23	WASHER_M5_PLASTIC BLACK	2996010	4
24	2994415 WASHER PA6 M8 DIN125	2994415	2
25	NUT M8 DIN934	1001675	1
26	M8X12 DIN912/8.8	1008963	1

Sheet 1/2

* Use spray-oil before assembly

** Use thread-locking adhesive

NOTICE: THE INFORMATION CONTAINED ON THIS DRAWING IS PROPRIETARY TO VERMEIREN GROUP AND SHALL NOT BE DISCLOSED IN WHOLE OR IN PART, OR USED FOR ANY DESIGN OR MANUFACTURE, EXCEPT WHEN SUCH USER POSSESSES DIRECT WRITTEN AUTHORISATION FROM VERMEIREN GROUP

HITCH OF WHELLCHAIR BLUMIL SPORT/GO

Plan No. E00115652/C.1

Scale: 1:4	Drafted	Verified	Confirmed
Date	01.04.2026	30.09.2026	30.09.2026
Initials	KK	PM	MK

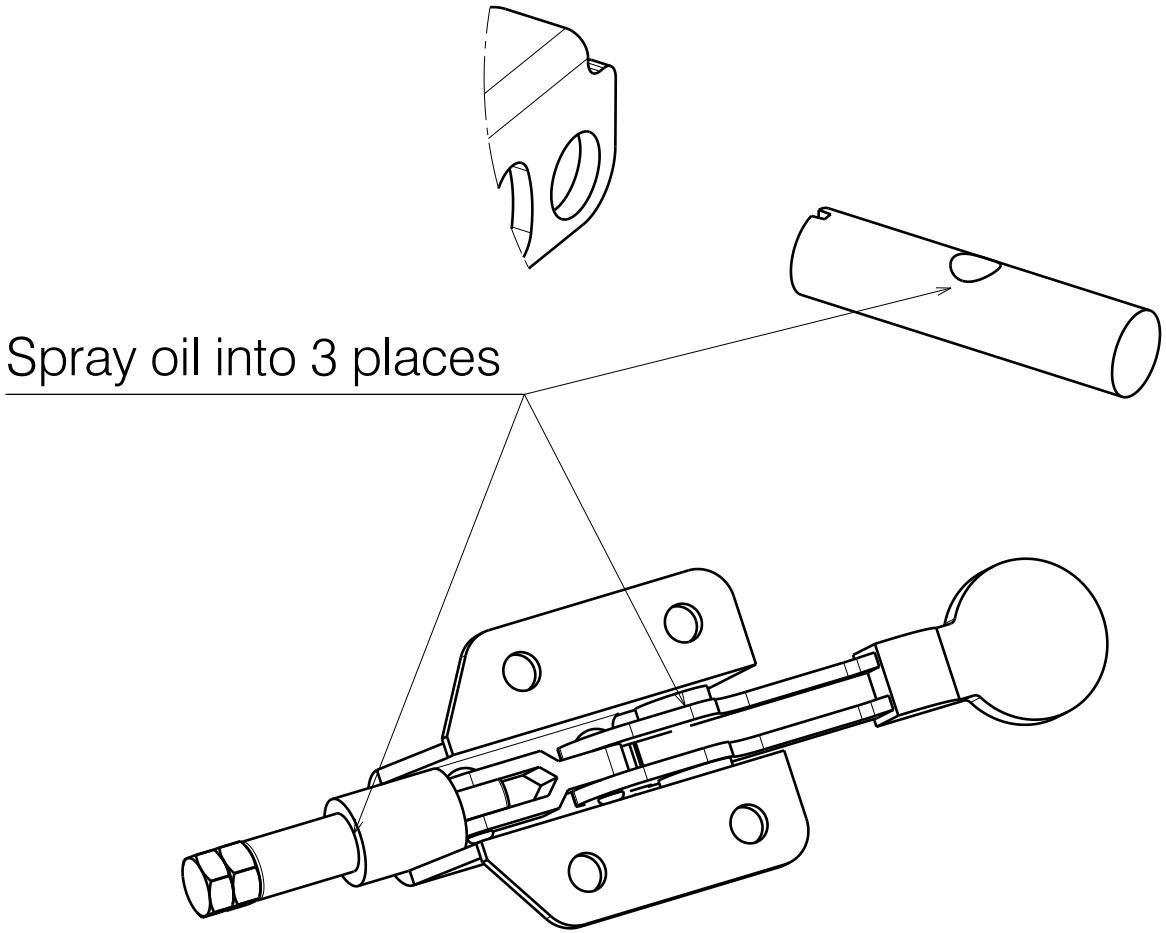

Sheet 2/2

NOTICE: THE INFORMATION CONTAINED ON THIS DRAWING IS PROPRIETARY TO VERMEIREN GROUP AND SHALL NOT BE DISCLOSED IN WHOLE OR IN PART, OR USED FOR ANY DESIGN OR MANUFACTURE, EXCEPT WHEN SUCH USER POSSESSES DIRECT WRITTEN AUTHORISATION FROM VERMEIREN GROUP

HITCH OF WHELLCHAIR BLUMIL SPORT/GO

Plan No.
E00115652/C.1

Scale: 1:4	Drafted	Verified	Confirmed
Date	01.04.2026	30.09.2026	21.09.2026
Initials	KK	PM	MK